REVISION RECORD				
REV.	DESCRIPTION	ECN No.	APPROVED	DATE

IEC 技术参数 IEC Technical Data	
工作温度 Operating temperatur [°C]	-25~+80
防护等级 IP Class (IN Locked condition)	IP67
额定电压 Rated Voltage [V]	—
额定电流 Rated Current [A]	—
导线截面积Conductor cross section 硬质/柔性导线 Solid/ flexible [mm²]	—
接线范围 Wire Range 单/多芯线 Solid/Stranded [AWG]	—
材 料 Material	
绝缘材料 Insulation Material	PA66
阻燃等级 Imflammability	UL94V-0
螺母/螺丝Connector Nut/Screw	PA66
符合RoHS环保要求	

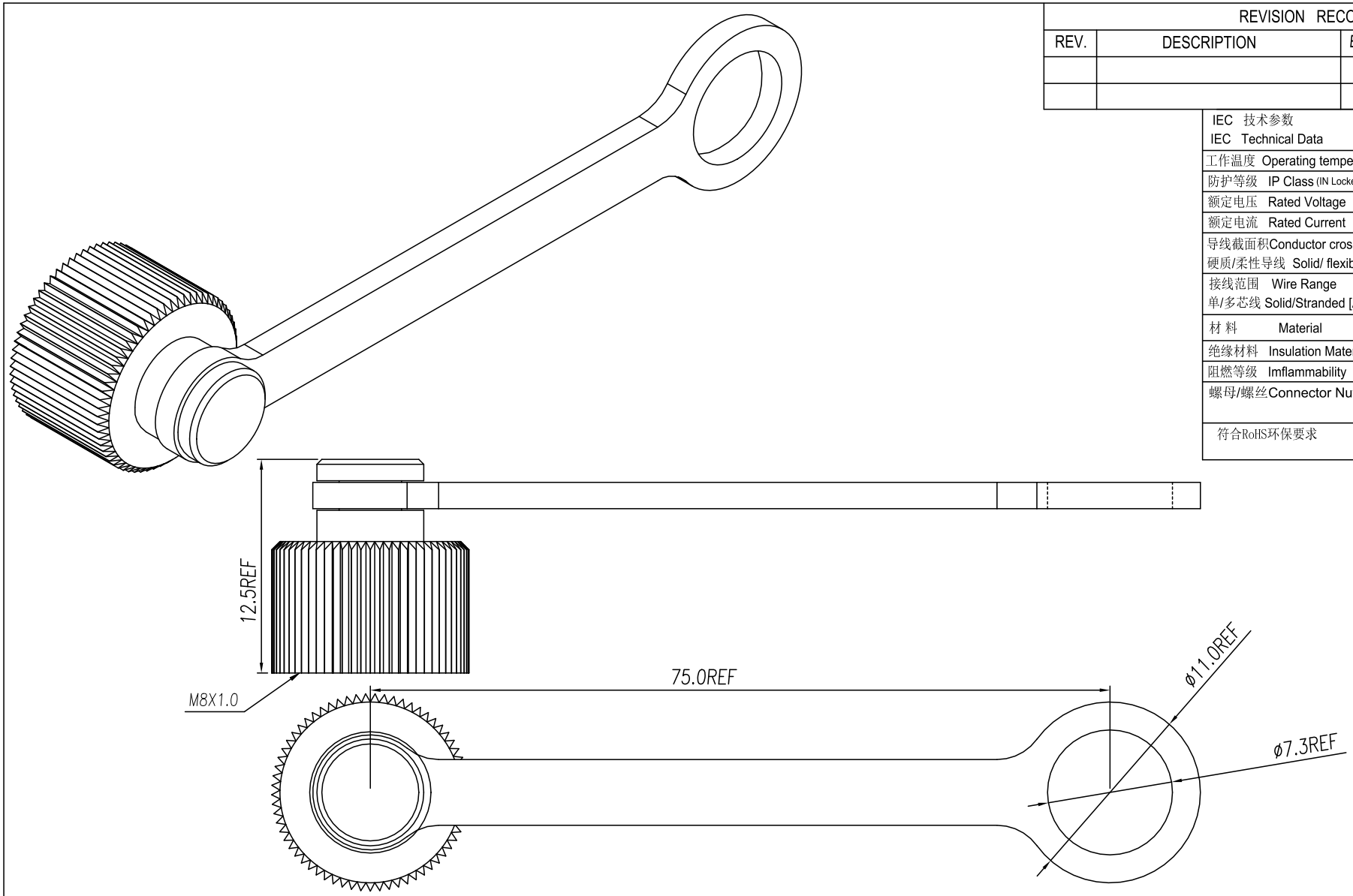

编号 No.	料号 Materials.No	品名 Name	材 料 规 格 Description	单位 Unit	用量 Qty
A		CAP	Plastic Black	pcs	1

慈溪市万捷电子有限公司
CIXI WANJIE ELECTRONIC CO., LTD

PART NO.: M08-CAP-PM8X1.0-1A

NO SPECIFIED TOLERANCE									
LINEAR	0.5~6	±0.1	Cus' P/N:			Order No :	---	Drawing No.:	SP-02-M00XXX
	6~30	±0.2	DES.	Jun	DATE		UNITS	mm	THIRD ANGLE PROJECTION / PAGE
	>30	±2%	CHK.		DATE		SIZE	A4	1 of 1
ANGLES	±1°		APP.		DATE		SCALE	X:X	文件等级:外部公开