Transfer or duplication of this document as well as the utilization or communication of its contents are prohibited unless explicit authorization is granted. Violations will be liable for compensation. All rights reserved for patent, utility model or designs registrations. 除非经予明确授权，否则禁止转让、复制、利用、交流本文件的内容。侵犯者将负赔偿责任。本公司保留对涉及发明、实用新型和外观专利的所有权利。

REVISION RECORD				
REV.	ESCRIPTION	ECN No.	APPROVED	DATE
V0	新发行		ZhaoXY	24.04.01

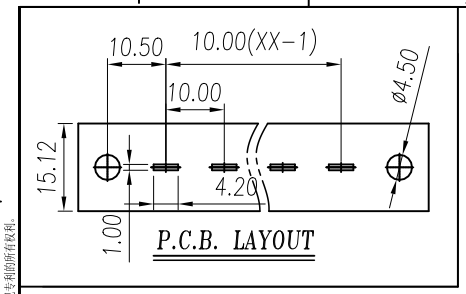

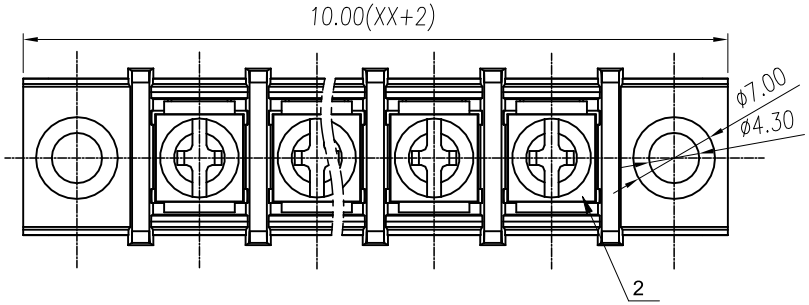

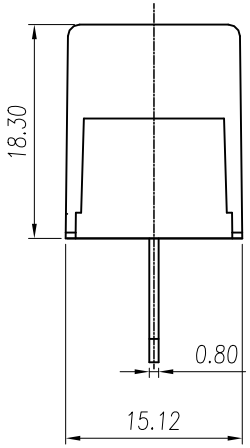

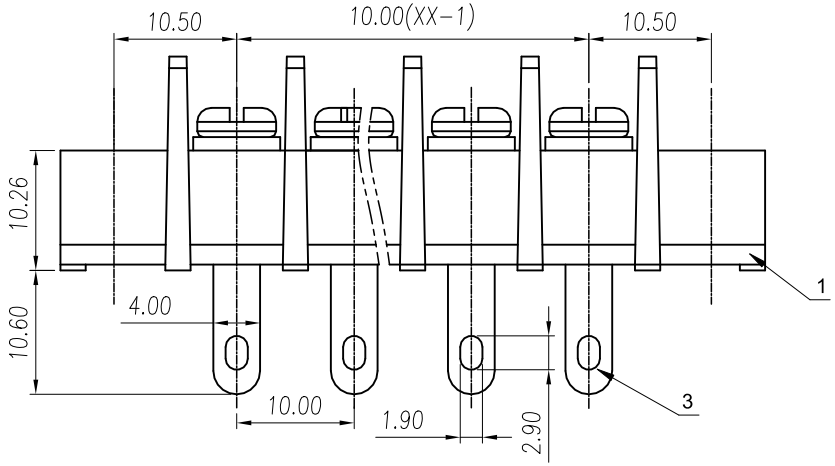

电 气 性 能/Electrical

额定电压/Rated voltage	300V
额定电流/Rated current	25A
接触电阻/Contact resistance	20mΩ
绝缘电阻/Insulation resistance	500MΩ/DC500V
使用线径/Wire range	22~12AWG
耐 电 压/With standing voltage	AC 1600V/1 Min
机 械 性 能/Mechanica	
扭　矩/Torque	1.2Nm(10.6Lb.in)
温度范围/Temp.Range	-40°C~+105°C
瞬时温度/MAX Soldering	+260°C, for 5 Sec
尺　寸/Dimensions	
间 距/Pitch	10.0mm
极 数/Poles	2~22p

ITEM	NAME OF PART	MATERIAL	NOTES
3	Pin Header	Copper Alloy	Sn Plated
2	Screws	Steel	M4 Steel Ni plated
1	Housing	PA66	UL94V-0

General Tolerances								—	▱	⊥
variable range	to 6	over 6 to 10	over 10 to 30	over 30 to 60	over 60 to 100	over 100 to 160	over 160 to	to 10	over 10 to 100	over 100 to
tolerance	±0.20	±0.30	±0.50	±0.70	±1.00	±1.30	±1.60	0.10	0.30	0.60

DES.	ZhaoXY	DATE	24.04.01	UNITS	mm	THIRD ANGLE PROJECTION	
CHK.	HuHT	DATE	24.04.01	SIZE	A4	TYPE: CUSTOMER DRAWING	SHEET 1 of 1
APP.	Jason	DATE	24.04.01	SCALE	2:1	DRAWING TYPE: SP-03	REV V1

WANJIE 慈溪市万捷电子有限公司 CIXI WANJIE ELECTRONIC CO., LTD

PART NO.: WJ55HM-XXP-1Y-00A

FOR-0371 Rev.1.0