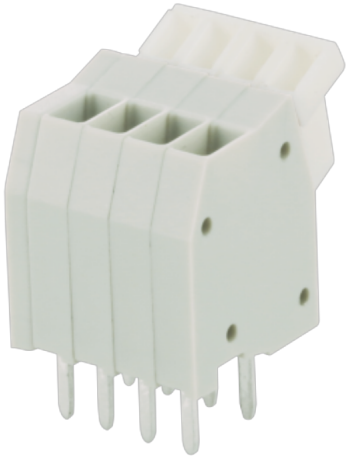

额定电流: 4A

额定电压: 150V

使用线径: 28-20AWG

间距:2.5mm

目录仅供参考，实际规格依产品工程图为准 版本1.0

## 技术数据-UL/CUL

| 等级 Use Group | B | C | D |
|---|---|---|---|
| 额定电压 Rate Voltage [V] | 150 | - | - |
| 额定电流 Rated Current [A] | 4 | - | - |
| 接线范围 Wire Range [AWG] | 28-20 | | |
| 耐电压 Dielectric Voltage-Withstand | 1.3KV | | |

## 技术参数-IEC

| 过电压类别 Overvoltage Category | III | III | II |
|---|---|---|---|
| 污染等级 Contamination Class | 3 | 2 | 2 |
| 额定电压 Rated Voltage [V] | 63 | 160 | 320 |
| 额定电流 Rated Current [A] | 6 | 6 | 6 |
| 额定冲击电压 Impulse withstand voltage [KV] | 2.5 | 2.5 | 2.5 |

| | |
|---|---|
| 导线截面积[硬/柔] Conductor cross section [mm²] | 0.2-0.5 |

## 材料 Material

| | |
|---|---|
| 绝缘材料 Insulation Material | PA66 |
| 阻燃等级 Flame relardant rating | UL94V-0 |
| 导体材料 Conductor Material | Copper alloy |
| 导体表面镀层 Plating of conductor surface | Sn plated |

## 一般参数 Other Date

| | |
|---|---|
| 间距/极数 Pitch/Poles [mm]/[P] | 2.5/01-30 |
| 剥线长度 Stripping Length [mm] | 5-6 |
| 螺丝/扭矩 Screw/Torque(Max)[N.m] | - |
| 工作温度 Operating temperature [℃] | -40～+105 |
| 焊锡温度 Soldering temperature | 260℃/5S |
| 引针尺寸 Pin dimensions [mm] | 0.75*0.5 |
| PCB板孔径 PCB Hole Diameter [mm] | □1.1 |

## 尺寸图

## PCB开孔图

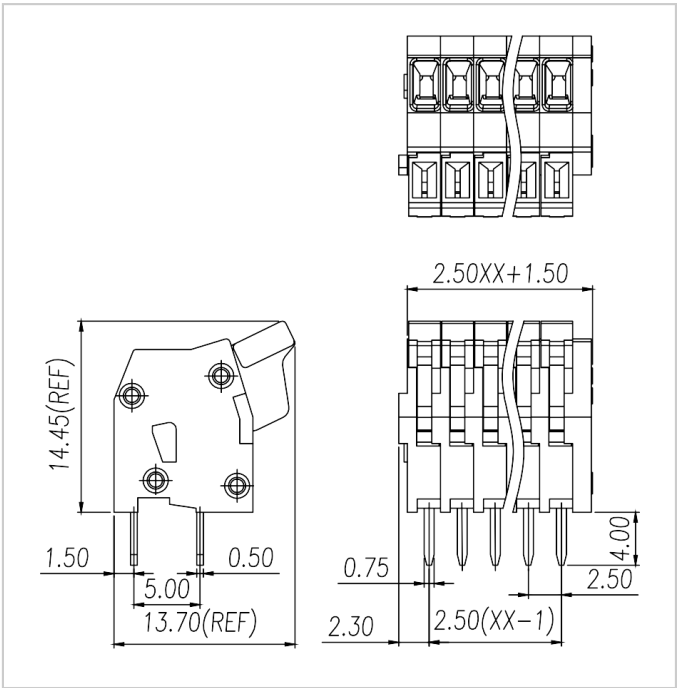
2.50XX+1.50
14.45(REF)
1.50
0.50
5.00
13.70(REF)
0.75
4.00
2.50
2.30
2.50(XX-1)

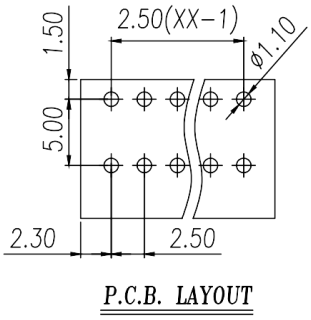
1.50
2.50(XX-1)
ø1.10
5.00
2.30
2.50
P.C.B. LAYOUT