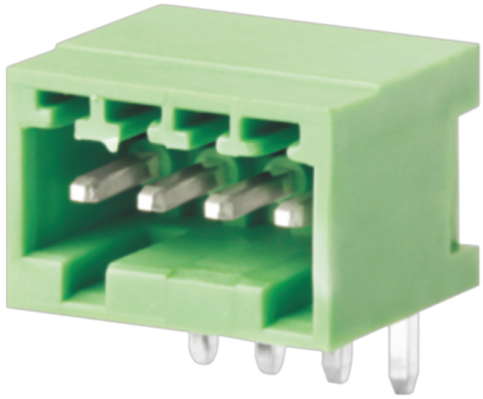

Rated current: 5A

Rated voltage: 150V

Use wire diameter: -

spacing:2.54mm

Install: Wave soldering

The catalog is for reference only. The actual specifications are subject to the product engineering drawings. version 1.0

UL/CUL

Use Group	B	C	D
Rate Voltage [V]	150	-	-
Rated Current [A]	5	-	-
Wire Range [AWG]		-	
Dielectric Voltage-Withstand		1.3KV	

IEC

Overvoltage Category	III	III	II
Contamination Class	3	2	2
Rated Voltage [V]	80	160	320
Rated Current [A]	6	6	6

Impulse withstand voltage [KV]	1.5	2.5	2.5
Conductor cross section [mm²]		-	

Material

Insulation Material	PA66
Flame relardant rating	UL94V-0
Conductor Material	Copper alloy
Plating of conductor surface	Sn plated

Other Date

Pitch/Poles [mm]/[P]	2.54/2-24
Stripping Length [mm]	-
Screw/Torque(Max)[N.m]	-
Operating temperature [℃]	-40～+105
Soldering method	Wave soldering
Pin dimensions [mm]	0.8*0.8
PCB Hole Diameter [mm]	Ø1.4

Dimensions

PCB hole diagram

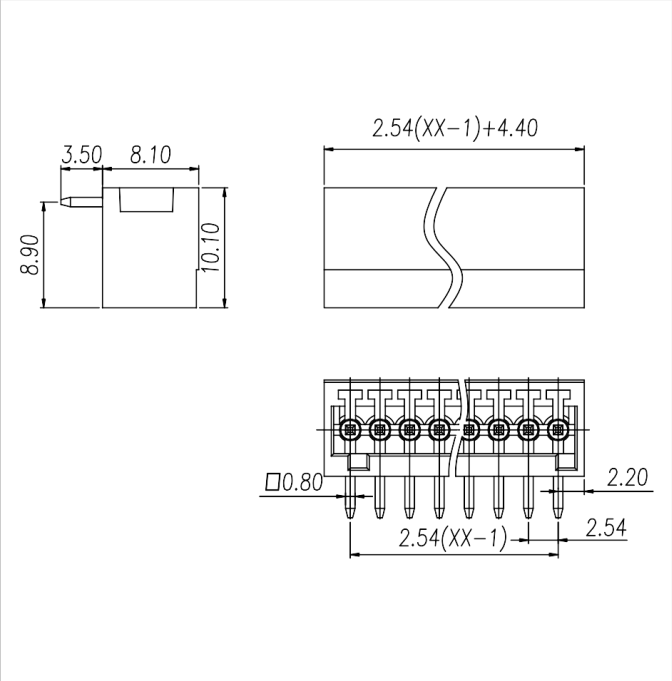

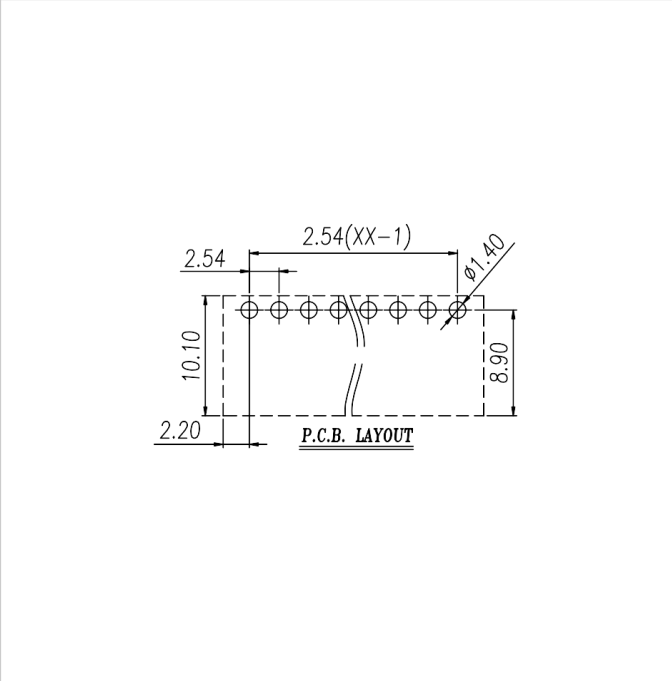

Accessories

WJ15EDGK-2.54